TOP-LINE®

1890 Swarthmore Avenue, PO Box 2020, Lakewood, NJ 08701
Phone: 800-526-3694, 732-363-4700, Fax: 732-364-8110
www.encoreplumbing.com • www.componenthardware.com

PROJECT NAME: _____

LOCATION: _____

SPECIFIER ITEM NO. _____ **QTY:** _____

TOP-LINE PART NO. _____

TOP-LINE® Lever Handle Waste Outlet with 2" NPS

D15-751x Series

D15-7510 Capped Overflow
D15-7515 With Overflow Assembly
D15-7510-R 2-1-1/2" Male Reducer



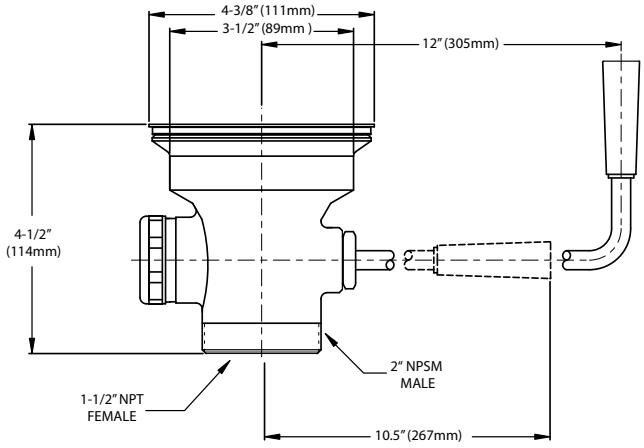

(D15-7510 shown)

Dimensions shown in inches (mm) are for reference only and are subject to change.

2" NPS Male waste outlet
Flow Rate: Max 20gpm

Approximate shipping weight - 4 lbs
Warranty - 2 years parts

Solid heavy duty cast body is specification and commercial quality

Commercial Quality Features

- Nickel plated zinc drain body
- Self-centering stainless steel face flange
- Stainless steel lever handle

SPECIFICATIONS:

Lever handle waste outlet to be TOP-LINE D15-751x Series in the following configuration:

____ D15-7510 Capped Overflow
____ D15-7515 With Overflow Assembly
____ D15-7510-R 2-1-1/2" Male Reducer

Drain to have nickel plated solid all metal construction. Drain to be for 3-1/2" sink opening diameter. Drain to have self-centering stainless steel face flange with snap in stainless steel flat strainer. Drain to be designed for trouble free fast drainage when the stainless steel lever handle is in the open position and has a positive sealing action when closed. Drain designed to accept 1-1/4" overflow assembly.

TOP-LINE is a registered trademark of Component Hardware, registered in the US
Specifications subject to change without notice © Component Hardware